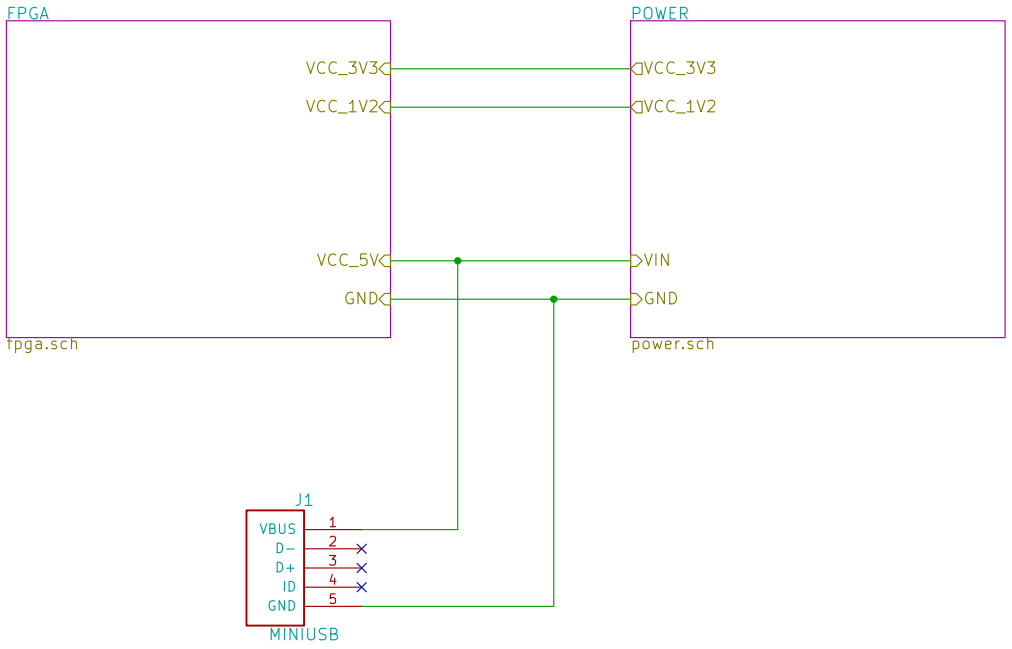

File: galaksija_v1.sch		
Sheet: /		
Title: Top level		
Size: A4	**Date: 15 feb 2010**	**Rev: V1.00**
KiCad E.D.A.		Id: 1/3